Doc#	Rev.	Date:
F800-93450B-R1	1	6/18/2025

Product Datasheet

SWS Part Number:	93450B
Product Code:	Illumination
Commodity Code:	Material Handling

Product Name :	Blue Arrow Forklift Safety Light
Product Description :	Forklift Arrow 9-110Vdc BLU

Specifications

Classifications : Certified with ISO9001, IATF16949, CE, and RoHS			
Voltage	9-110 Vdc		
Current Draw	2 Amps		
Power	10W		
Lumens	800 lm		
EMI Level	~0		
Projecting	Blue Arrow		
Optic Colour	Clear		
Colour Emitting	Blue		
Mounting	Permanent		
Vibration Resistance	15 Grms 24Hz to 2000Hz		
Polarity Protection	Yes		
Operating Temperatures	-40°C to +85°C		
IP Rating	IP68-IP69K		
Lifetime	50,000 Hrs.		
Salt Spray Test	ISO 9227		
Shock Resistance	60G		
SAE Length x Width x Height	3.46"	3.7"	3.15"
Metric Length x Width X Height	88mm	93.7mm	80mm

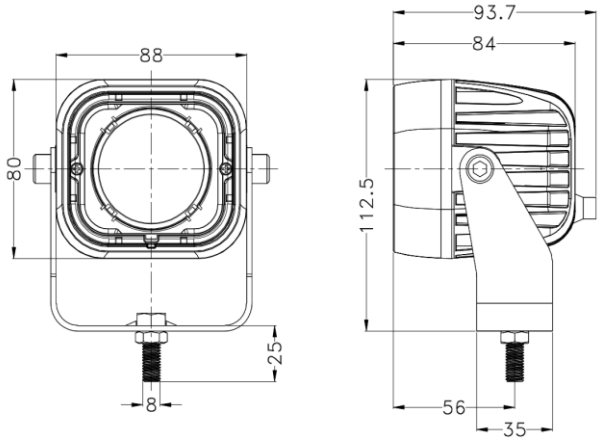

Warranty	3 Year	Views
Lens Material	Polycarbonate	
Body Material	Diecast Aluminum	
Base Material	Stainless Steel	
Included		
Instructions	Yes	
Mounting Hardware	Yes	
Sold Seperately		
Substitute Parts:	93470B	

Sold Seperately Other Material Handling Products	
93460R	Forklift light projects a red barrier line
93470B	Forklift light projects a blue warning spot
21201	Amber Beacon

SWS Warning Lights Inc.
7695 Blackburn Pkwy. Niagara Falls ON, L2H 0A6
Ph: 1-877-357-0222 warninglightsinc.com